AMBIPOWER® 280e HEAT PUMP

AVAILABLE IN WI-FI & NON-WI-FI MODELS

ONE OF AUSTRALIA'S POWERFUL AND EFFICIENT INTEGRATED HEAT PUMP

ULTRA LOW GWP | STANDARD 10 AMP PLUG | COP OF 5.2[1] | PEOPLE 2-6[7] | 280 LITRES CAPACITY | CYLINDER 10 YEAR WARRANTY[5]

FEATURES

- Advanced wrap around microchannel heating technology for uniform and faster water heating
- Back-up Element options in 2.4kW Hardwired or 1.5kW Plug & Lead
- Suitable for cold climates with an operating range from -6°C to 43°C[2]
- Suitable for harsh water conditions[3]
- Can save up to 73.9% on your water heating energy consumption compared to an electric water heater in Zone 3[4]
- User-friendly touch screen LED display
- Eligible for STCs (may be eligible for additional incentives in some states)
- 10 year cylinder warranty[5]
- Wi-Fi enabled with EcoNet™ Phone App
- Suitable for up to 6 people[7]
- Manufactured in Australia
- **Uses ULTRA LOW GWP R290 refrigerant with a GWP of 0.02**



RHEEM AMBIPOWER® 280e ULTRA LOW GWP HEAT PUMP

The AmbiPower® 280e Heat Pump is an ideal replacement for a similar sized electric water heater. It is an energy efficient alternative for areas where a traditional solar water heater may not be suitable. It uses the heat from the surrounding air to heat water and provides a reliable, efficient and sustainable way to reduce your water heating energy consumption.

A Heat Pump can work day and night as it extracts heat from the surrounding air and doesn't rely on direct sunlight to operate.

EcoNet® Powered by EcoNet™ the global Wi-Fi smart-phone based integrated control for your home's water heating systems. Developed by Rheem® for it's range of hot water systems offering optimised efficiency and control. Visit rheem.com.au for more details.

WHY CHOOSE A RHEEM HEAT PUMP?

AmbiPower® 280e Heat Pump has been designed and tested to withstand the harsh Australian conditions:
Rheem Ultranamel® exclusive coating, for extended cylinder life and reduces the risk of corrosion.
Microchannel technology provides a larger contact area for more efficient water heating.
Side fan provides maximum airflow and protects from the rain.
Durable outer shell in coated steel to reduce corrosion and withstand harsh weather conditions.
LED touchscreen controller provides optimum visibility, product performance information and user-friendly operation.

COP[1] – The Coefficient of Performance for a Heat Pump is the ratio of how much useful heat it produces for water heating to the power input into the water heater. The higher the COP number, the more efficient the Heat Pump is.

Ambient Air Temperature and Humidity – The performance of a Heat Pump changes with ambient air temperature, humidity and incoming water temperature. The warmer the air temperature and the higher the Relative Humidity and the cooler the water temperature, then the higher is the heating rate of the Heat Pump. Performance specifications stated in relation to the Heat Pump are measured at predefined conditions during its testing.

Average Heating Capacity (kW) – This is how much heating power is put into the water during the heating cycle. It is expressed as an average due to the changes in heating power from the refrigeration cycle as the water is being heated and its temperature increases during the heating cycle.

Hot Water Recovery Rate @ 45°C rise (L/hr) – Is the number of litres of water that can be heated through a 45°C temperature rise in one hour, e.g. when the air temperature is 19°C, the Heat Pump can heat 56 litres / hour of water @ 45°C rise.

Global Warming Potential (GWP) – The Global Warming Potential (GWP) was developed to allow comparisons of the global warming impacts of different refrigerant gases. Specifically, it measures how much energy the emissions of 1 ton of a gas will absorb over a given period of time, relative to the emissions of 1 ton of carbon dioxide (CO_2). The larger the GWP, the more that a given gas warms the Earth compared to CO_2 over that time period. The time period usually used for GWPs is 100 years. GWPs provide a common unit of measure. GWP of common refrigerants used in heat pumps are R410 - GWP of 2088, R134a - GWP of 1530, R513a - GWP of 631, R290 - GWP of 0.02 and CO_2 - GWP of 1.

AMBIPOWER® 280e HEAT PUMP

AVAILABLE IN WI-FI & NON-WI-FI MODELS

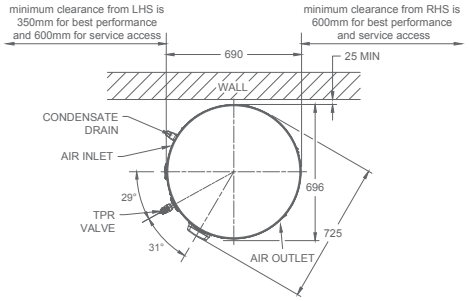

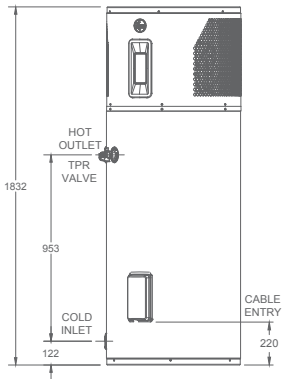

AMBIPOWER® 280e					
MODEL		551E280			
PRODUCT RANGE	UNIT	Hardwired	Plug & Lead	Wi-Fi Hardwired	Wi-Fi Plug & Lead
Product Code Standard (Mg.) Anode		551E280G5	551E280R3P	551E280R5NT	551E280R3PT
Product Code Blue (Al.) Anode		551E280G5/B	551E280R3P/BL	551E280R5NT/BL	551E280R3PT/BL
Storage capacity	Litres	280			
Boost capacity by electric heating unit	Litres	236			
Rated Heat Pump power input @ 240 V	Watts	690			
Coefficient of Performance (@ 19°C)[1]	COP	5.2			
Noise Level (LA90) @ 1 metre[6]	dB(A)	48			
People per household[7]		Up to 6			
Maximum rated power input @ 240 V	Watts	3100	2200	3100	2200
Element Rating	Watts	2400	1500	2400	1500
Recommended electrical circuit	Amps	15A	10A	15A	10A
Dimensions & specifications					
Tank height	mm	1832			
Tank width	mm	696			
Tank depth	mm	725			
Heater weight - cartoned	kg	135			
Heater weight - full	kg	402			
Refrigerant		R290			
Maximum Refrigerant charge	gms	340			
IP Rating		IP24			
Water connections & Pressure settings					
Inlet & Outlet		Rp 3/4			
TPR Valve setting	kPa	1000			
Expansion Control Valve (ECV) setting	kPa	850			
Maximum mains supply pressure					
With expansion control valve	kPa	680			
Without expansion control valve	kPa	800			

BACK-UP ELEMENT RECOVERY RATE @ 240 V AND A TEMPERATURE RISE OF

Rating (kW)	30˚C (litres/hour)	40˚C (litres/hour)	50˚C (litres/hour)
2.4	69	52	41
1.5	44	33	26

HEAT PUMP PERFORMANCE SPECIFICATIONS 551E280G5 & 551E280G5/B

Ambient air temperature	Relative Humidity	Average heating capacity (kW)	Recovery rate @ 45˚C rise (L/hr)	Average Coefficient of Performance (COP)[1]
6˚C	87%	2.1	40	3.8
19˚C	66%	2.9	56	5.2
33˚C	39%	3.6	69	6.6
34˚C	57%	3.7	71	6.7

ZONE 1
ZONE 2
ZONE 3
ZONE 4
ZONE 5



STCs Small-scale Technology Certificates (STCs) provide a financial incentive to encourage the installation of Solar and Heat Pump water heaters provided under a Federal Government legislated scheme.

This map shows the climate Zones within Australia which will define the number of STCs allocated to an approved Heat Pump water heater. The country is divided into climate zones for STC creation: 4 for solar and 5 for heat pumps.

For more information on STCs **visit www.rheem.com.au/rheem/help/offers-and-incentives/stcs**

1. The COP of 5.2 is the average value in the AS/NZS5125 performance test at 19°C ambient temperature over the entire heat-up process. Note that the actual COP of the product at any given time will be impacted by several factors, including the ambient and cold-water inlet temperatures at the place of installation and time of day/season of operation.
2. The electric element activates when the ambient air temperature is outside this range and heating of the water is required and if the heat pump has been heating in between -6°C to 7°C for 200 minutes.
3. Warranty limits regarding water chemistry. Harsh water regions – the Rheem warranty may not apply if the water heater is connected to a water supply which has a Total Dissolved Solids content >2500mg/L; is scaling with a Saturation Index >+0.8, or; is corrosive with a Saturation Index <-1.0.
4. Energy savings of up to 73.9% are based on Australian Government approved TRNSYS simulation modelling using a medium load in Zone 3 and apply when replacing an electric water heater of similar size with a Rheem 551E280 Heat Pump water heater. Any savings will vary depending upon your location, type of water heater being replaced, hot water consumption and fuel tariff. Before installation - seek advice as to suitability to household usage and tariffs. The impact on an electricity account will depend on the tariff arrangement of the water heater being replaced and where you live. The water heater is recommended for connection to an uninterrupted 24 hour continuous tariff power supply. Depending upon the size of the household and its hot water requirements and if the Electricity Retailer permits, an extended off-peak (overnight and day) or Extended time controlled power supply connection of a minimum 16 hours per day may also be suitable. Before purchase consult your energy provider for more information on cost comparisons.
5. Warranty Periods: 10 years supply on cylinder, 3 years labour on cylinder, 3 years supply on sealed system including labour, 1 year supply and labour on all other parts. Applies to a single-family domestic dwelling only. Conditions apply. See the Rheem warranty set out in the Owner's Guide and Installation Instructions or view at www.rheem.com.au/warranty
6. A Noise Level (LA90) of 48 dB(A) was measured at 1m from the water heater during a Noise Test conducted to Standard GB/T 23137-2008 in a hemi-anechoic chamber within a laboratory. The noise level when installed may be higher due to sound reflections from adjacent walls and structures.
7. No. of people recommended based on 7 min showers @ 42°C. Appliances using hot water should be counted as one (1) person.

A Greater Degree of Good™ represents our global commitment to sustainability.

Certified System Quality ISO 9001

Certified Product Australian Standard AS/NZS 2712 Le SMK0757 SAI Global

Rheem Australia Pty Ltd.
1 Alan Street, Rydalmere, NSW 2116 Australia
PO Box 7508, Silverwater NSW 2128 Australia
www.rheem.com.au

WaterMark AS 3498 WMKA00153

RHE672-AUG2026-BELONG

®Registered Trade mark of Rheem Australia Pty Ltd. ™ Trade mark of SAI Global. A Greater Degree of Good is a Trade mark of Rheem Manufacturing Company. Materials and specifications are subject to change without notice.

SunCity HotWater
Solar - Electric - Gas - Heat Pump

HOT WATER. DONE RIGHT.

Your Local Hot Water Specialists

SUPPLY | INSTALLATION | REPLACEMENT
REPAIRS | SERVICING

CONTACT SUNCITY HOT WATER

WEBSITE

suncityhotwater.com.au

EMAIL

admin@suncityhotwater.com.au

PHONE

1300 728 122

SERVICING

Sunshine Coast | Brisbane | Bribie Island | Gympie

SOLAR | ELECTRIC | GAS | HEAT PUMP

suncityhotwater.com.au | 1300 728 122

© 2026 SunCity HotWater. All Rights Reserved.