AMBIHEAT® HDc-270 HEAVY DUTY HEAT PUMP

PLATINUM SERIES

LOW GWP | COP OF 4.5 [1] | 2-6 [7] | 270 LITRES CAPACITY | CYLINDER 10 YEAR WARRANTY [4]

FEATURES

- Advanced wrap around microchannel heating technology for uniform and faster water heating
- Suitable for cold climates with an operating range from -5°C to 43°C[5]
- Suitable for harsh water conditions. Optional blue anode model available[2]
- Can save up to 73% on your water heating energy consumption compared to an electric water heater in Zone 3[3]
- Highest recovery range in the Rheem Heat Pump range
- 2.4 kW boost element
- User-friendly touch screen LED display
- Dual timer function available
- Eligible for STCs (may be eligible for additional incentives in some states)
- 10 year cylinder warranty[4]
- Suitable for up to 6 people[7]
- Manufactured in Australia
- **Uses Low GWP R513a refrigerant**

MAINS PRESSURE

ENHANCED FROST PROTECTION [5]

[2]

[3]

AMBIHEAT® HDc-270 HEAVY DUTY HEAT PUMP

Ambiheat® HDc-270 Heat Pump is a smart, energy efficient alternative for areas where a traditional solar water heater may not be suitable. It uses the heat from the surrounding air to heat your water and provides a reliable, efficient and sustainable way to reduce your water heating energy consumption. A Heat Pump works day and night as it extracts heat from the surrounding air and doesn't rely on direct sunlight to operate.

WHY CHOOSE A RHEEM HEAT PUMP?

Ambiheat® Heat Pump has been designed and tested to withstand the harsh Australian conditions:

Rheem Ultranamel® exclusive coating, protects the cylinder against corrosion.

Microchannel technology provides a larger contact area for more efficient water heating.

Side fan design provides maximum airflow and protects from the rain.

Durable top cover ABS and ASA* design means the unit can easily withstand all weather conditions.

Smart LED controller display provides optimum visibility and control at your fingertips.

COP[1] – The Coefficient of Performance for a Heat Pump is the ratio of how much useful heat it produces for water heating to the power input into the water heater. The higher the COP number, the more efficient the Heat Pump is.

Ambient Air Temperature and Humidity – The performance of a Heat Pump changes with ambient air temperature, humidity and incoming water temperature. The warmer the air temperature, the higher the Relative Humidity and the cooler the water temperature, the higher is the heating rate of the Heat Pump. Performance specifications stated in relation to the Heat Pump are measured at predefined conditions during its testing.

Average Heating Capacity (kW) – This is how much heating power is put into the water during the heating cycle. It is expressed as an average due to the changes in heating power from the refrigeration cycle as the water is being heated and its temperature increases during the heating cycle.

Recovery Rate @ 45°C rise (L/hr) – Is the number of litres of water that can be heated through a 45°C temperature rise in one hour, e.g. when the air temperature is 19°C, the Heat Pump can heat 77 litres of 15°C to 60°C in one hour.

Global Warming Potential (GWP) – The Global Warming Potential (GWP) was developed to allow comparisons of the global warming impacts of different refrigerant gases. Specifically, it measures how much energy the emissions of 1 ton of a gas will absorb over a given period of time, relative to the emissions of 1 ton of carbon dioxide (CO_2). The larger the GWP, the more that a given gas warms the Earth compared to CO_2 over that time period. The time period usually used for GWPs is 100 years. GWPs provide a common unit of measure. GWP of common refrigerants used in heat pumps are R410 - GWP of 2088, R134a - GWP of 1530, R513a - GWP of 631, R290 - GWP of 0.02 and CO_2 - GWP of 1.

*Acrylonitrile Butadiene Styrene (ABS) is an opaque thermoplastic and amorphous polymer and Acrylonitrile Styrene Acrylate (ASA), also called Acrylic Styrene Acrylonitrile, is an amorphous thermoplastic with improved weather resistance.

AMBIHEAT® HDc-270 HEAVY DUTY HEAT PUMP

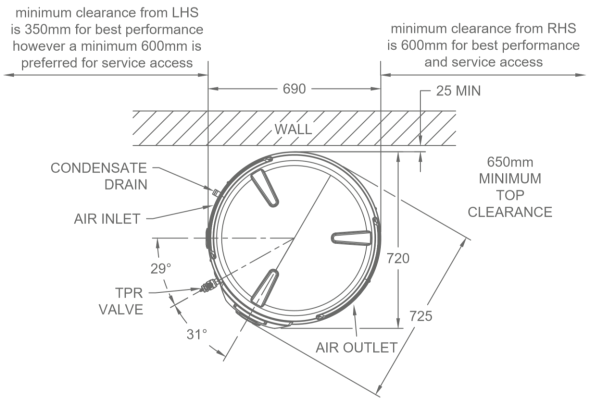

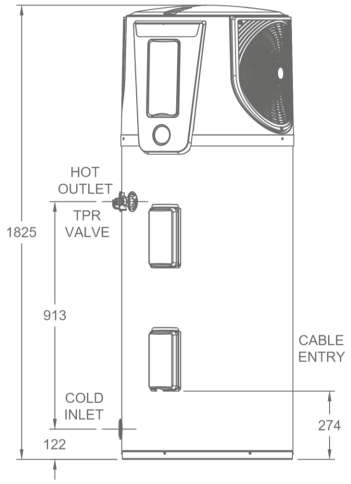

Ambiheat® HDc-270 Heat Pump Water Heater	Zone 1	Zone 2	Zone 3	Zone 4	Zone 5
Percentage (%) Energy Savings (medium load)	75%	73%	73%	71%	70%

AMBIHEAT® HDc-270		
MODEL	**UNIT**	**571D270/B**
Storage capacity	Litres	270
Boost capacity	Litres	195
Rated Heat Pump power input	Watts	985
Element rating	kW	2.4
Recommended electrical circuit	Amps	15
Coefficient of Performance (@ 19°C)[1]	COP	4.5
Noise Level (LA90) @ 1 metre[6]	dB(A)	48
People per household[7]		Up to 6
Dimensions & specifications		
Tank height	mm	1825
Tank width	mm	690
Tank depth	mm	720
Heater weight - cartoned	kg	135
Heater weight - full	kg	405
Water connections & Pressure settings		
Inlet & Outlet		Rp 3/4
Temperature Press Relief (TPR) Valve setting	kPa	1000
Expansion Control Valve (ECV) setting	kPa	850
Maximum mains supply pressure		
With expansion control valve	kPa	680
Without expansion control valve	kPa	800

BACK-UP ELEMENT RECOVERY RATE @ 240 V AND A TEMPERATURE RISE OF				
Rating (kW)	Current (Amps)	30˚C (litres/hour)	40˚C (litres/hour)	50˚C (litres/hour)
2.4	15	69	52	41

HEAT PUMP PERFORMANCE SPECIFICATIONS				
Ambient air temperature	Relative Humidity	Average heating capacity (kW)	Recovery Rate @ 45˚C rise (L/hr)	COP*
R513A (CVC test report GJW2023-5599-S)				
7.2˚C	81%	3.3	62	3.9
19˚C	62%	4	77	4.4
33.5˚C	36%	5.1	98	5.1
34.5˚C	52%	5.3	101	5.3

**COP - Coefficient of Performance*

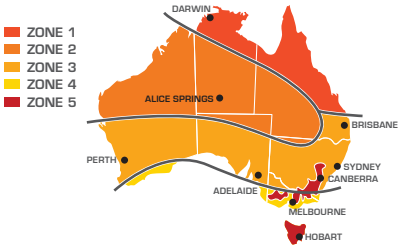

STCs Small-scale Technology Certificates (STCs) provide a financial incentive to encourage the installation of Solar and Heat Pump water heaters provided under a Federal Government legislated scheme.

ELIGIBILITY CRITERIA This map shows the climate Zones within Australia which will define the number of STCs allocated to an approved Heat Pump water heater. The country is divided into climate zones for STC creation: 4 for solar and 5 for heat pumps.

For more information on STCs **visit www.rheem.com.au/rheem/help/offers-and-incentives/stcs**

1. A COP of 4.5 was measured under test conditions with an ambient air temperature of 19˚C/15˚C (Dry Bulb/Wet Bulb) and heating of the water from 15˚C to 60˚C during water heater operation. Note that the actual COP of the product at any given time will be impacted by several factors, including the ambient and cold-water inlet temperatures at the place of installation and time of day/ season of operation.
2. Warranty limits regarding water chemistry. Harsh water regions – the Rheem warranty may not apply if the water heater is connected to a water supply which has a Total Dissolved Solids content >2500mg/L; is scaling with a Saturation Index >+0.8, or; is corrosive with a Saturation Index <-1.0.
3. Energy savings of up to 73% are based on Australian Government approved TRNSYS simulation modelling using a medium load in Zone 3 and apply when replacing a storage electric water heater of similar size with a Rheem 571D270 Heat Pump water heater. Any savings will vary depending upon your location, type of water heater being replaced, hot water consumption and fuel tariff. The impact on an electricity account will depend on the tariff arrangement of the water heater being replaced and where you live. This Heat Pump water heater is recommended for connection to a 24 hour continuous tariff power supply. Depending upon the size of the household and their hot water requirements, an extended off-peak (overnight and day) or Extended time-controlled power supply connection may also be suitable. Before purchase consult your energy provider for more information on cost comparisons.
4. Warranty Periods: 10 years supply on cylinder, 3 years labour on cylinder, 3 years supply on sealed system including labour, 1 year supply and labour on all other parts. Applies to a single family domestic dwelling only. Conditions apply. See the Rheem warranty set out in the Owner's Guide and Installation Instructions or view at www.rheem.com.au/warranty
5. The specified -5˚C to 43˚C temperature range is the operational range of the Heat Pump. The electric element activates when the ambient air temperature is outside this range and heating of the water is required.
6. Noise Level – A Noise Level (LA90) of 48 dB(A) was measured at 1m from the water heater during a Noise Test conducted to Standard GB/T 23137-2008 in a hemi-anechoic chamber within a laboratory. The noise level when installed may be higher due to sound reflections from adjacent walls and structures.
7. No. of people recommended based on 7 min showers @ 42°C. Appliances using hot water should be counted as one (1) person.

A Greater Degree of Good™ represents our global commitment to sustainability.

Certified System Quality ISO 9001

Certified Product Australian Standard AS/NZS 2712 Lic SMK41314 SAI Global

Rheem Australia Pty Ltd.
1 Alan Street, Rydalmere,
NSW 2116 Australia
PO Box 7508, Silverwater
NSW 2128 Australia
www.rheem.com.au

WaterMark AS 3498 WMKA21762

RHE626-SEPT2025-BELONG

®Registered Trade mark of Rheem Australia Pty Ltd. ™ Trade mark of SAI Global. A Greater Degree of Good is a Trade mark of Rheem Manufacturing Company. Materials and specifications are subject to change without notice.

HOT WATER. DONE RIGHT.

Your Local Hot Water Specialists

SUPPLY | INSTALLATION | REPLACEMENT
REPAIRS | SERVICING

CONTACT SUNCITY HOT WATER

WEBSITE

suncityhotwater.com.au

EMAIL

admin@suncityhotwater.com.au

PHONE

1300 728 122

SERVICING

Sunshine Coast | Brisbane | Bribie Island | Gympie

SOLAR | ELECTRIC | GAS | HEAT PUMP

suncityhotwater.com.au | 1300 728 122

© 2026 SunCity HotWater. All Rights Reserved.